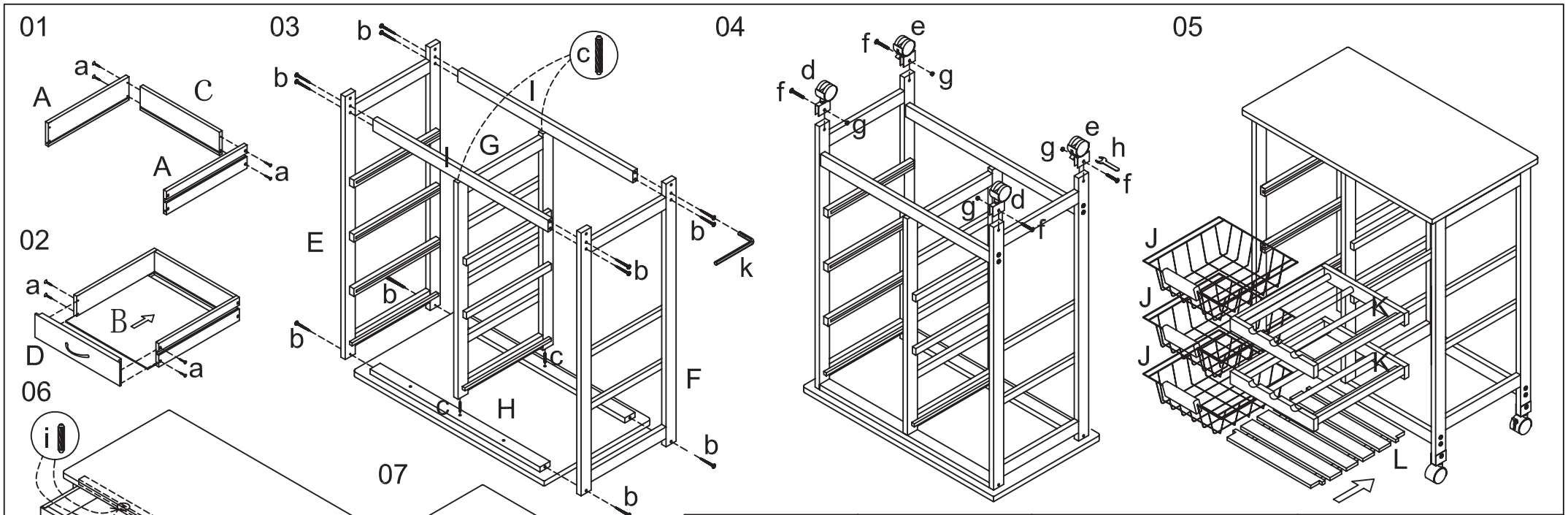

A	4pcs	B	2pcs				
C	2pcs	D	2pcs	E	1pc	F	1pc
G	1pc	H	1pc	I	2pcs	J	3pcs

Zeller Present Handels GmbH
D-63939 Woerth
www.zeller-gmbh.com

K	2pcs	L	1pc	a	16pcs	b	12pcs	c	4pcs	d	2pcs	e	2pcs	f	4pcs	g	4pcs	h	1pc	i	2pcs	j	3pcs	k	1pc